d) clutch control with the gearshift pedal, when starting from rest, is also possible. In this case, after engaging the gear, retain the pedal by both toe and heel, gradually returning it to the middle position.

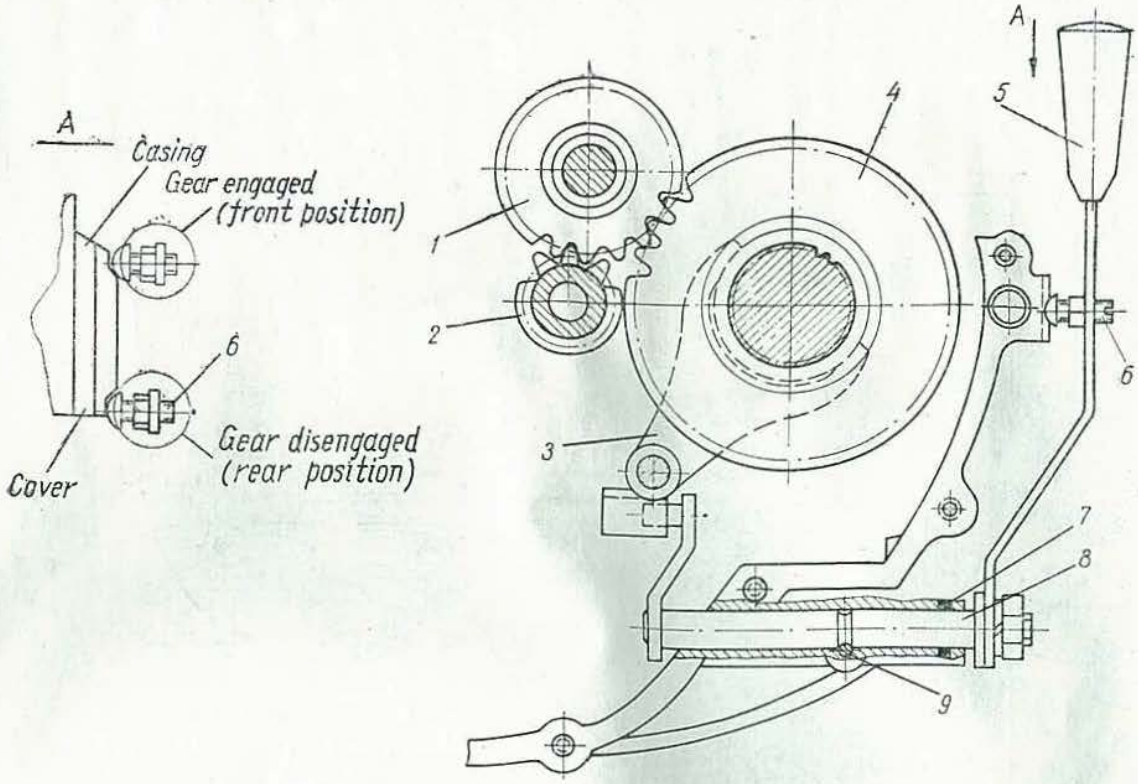

Fig. 19. Reverse shift mechanism:

1 — reverse idle gear; *2* — reverse gear of primary shaft; *3* — reverse shift fork; *4* — reverse sliding gear of secondary shaft; *5* — reverse lever; *6* — round head screw; *7* — sealing rubber ring; *8* — reverse shift fork lever; *9* — pin

3. Coasting for a long time or lengthy engine operation with the clutch released is inadmissible as the clutch release bearing will overheat and become unusable.

4. The clutch release mechanism is adjusted, whenever required, by means of adjusting bolt *6* (Fig. 20). With the proper adjustment, there must be a small clearance between the end of the adjusting bolt and the intermediate rod. The presence of the clearance can be checked by swinging the clutch release lever or gearshift pedal. The free travel, when swinging the upper head of the clutch release lever, must not exceed 1 mm. The free travel, when swinging the front arm of the gearshift pedal, should not be greater than 10 mm. Improper adjustment will lead to premature failure of the gear box. On completing the adjustment, lock the adjusting bolt with a check nut. The manual drive of the clutch release mechanism is adjusted by means of the adjusting screw of the clutch cable. The manual drive must be adjusted in such a way that the travel of rod *12* during manual disengagement of the clutch, is not greater than the travel of the rod during disengagement of the clutch. Proceed as follows to

Downloaded from www.Manualslib.com manuals search engine