From the main line the oil is fed to the annular groove in the front bearing body and, from there, is directed through the channel into the centrifuge body. After being cleaned in the centrifuge, the oil is supplied through the oil-out passage of crankshaft *6* and oil-supply passage *2* in the web to catchers *4* located in the crankpins, and further, through holes *3*, gets into connecting rod bushes.

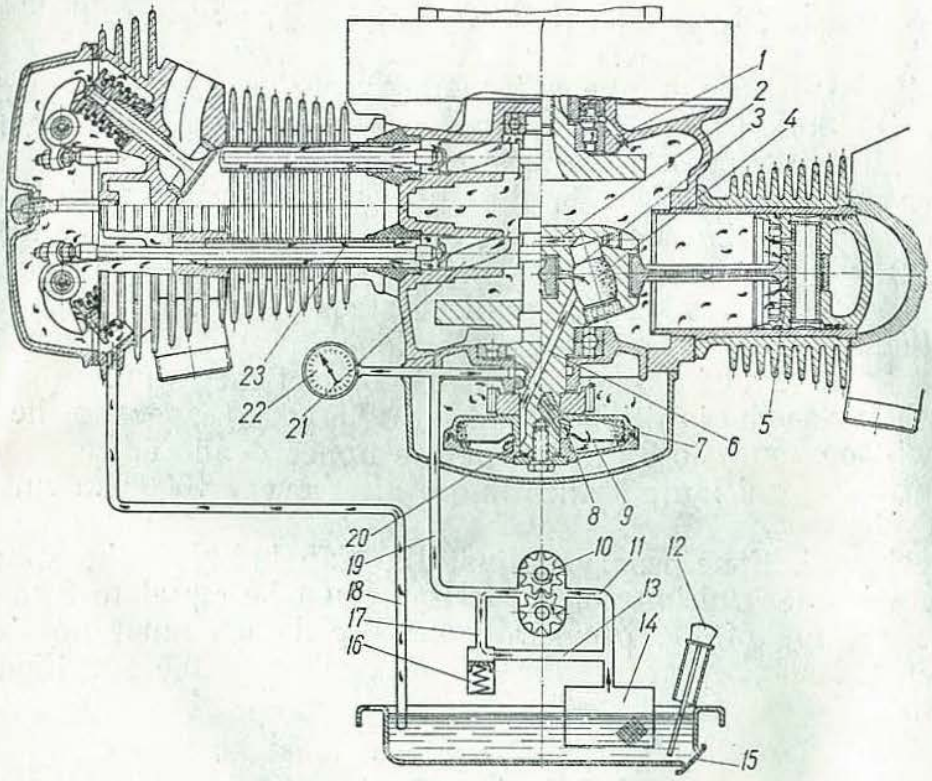

Fig. 10. Engine lubricating system:

1 — oil drain passage; *2* — oil-supply passage in web; *3* — hole for lubrication of connecting rod bearing; *4* — catcher; *5* — hole for lubrication of piston pin; *6* — oil-drain passage of crankshaft; *7* — oil-supply passage of crankshaft; *8* — hole for supplying oil into centrifuge body; *9* — hole in screen; *10* — oil pump; *11* — suction channel; *12* — filler plug; *13* — by-pass channel; *14* — gauze filter; *15* — drain hole plug; *16* — reducing valve; *17* — oil-supply passage of reducing valve; *18* — drain pipe; *19* — main oil line; *20* — hole for draining oil from centrifuge; *21* — slot in tappet for supplying oil to cylinder head; *22* — emergency oil pressure transmitter; *23* — oil-supply passage in rod housing

The fast-moving parts of the crank gear contribute to intensive splashing of oil and the formation of oil mist in the crankcase. The oil mist is used to lubricate the working surfaces of the cylinders, piston pins, connecting rod small ends, tappet guides, crankshaft antifriction bearings, timing pinions, ball bearings, camshaft cams, tappets and other friction parts.

The atomized oil, after getting into tappet slots *21*, comes into the housings of the rods, settles there and flows down into the cylinder heads. In them, the oil is splashed by the valves and springs, thus lubricating the valves and rockers. An excess of oil flows down drain pipe *18* back into the crankcase.

Downloaded from www.Manualslib.com manuals search engine