Carburettors

The engine is supplied from two (right-hand and left-hand) carburettors К301Д or К301Б, which are similar in design but not interchangeable. The carburettors are installed on the cylinder heads.

The carburettor design is shown in Fig. 13.

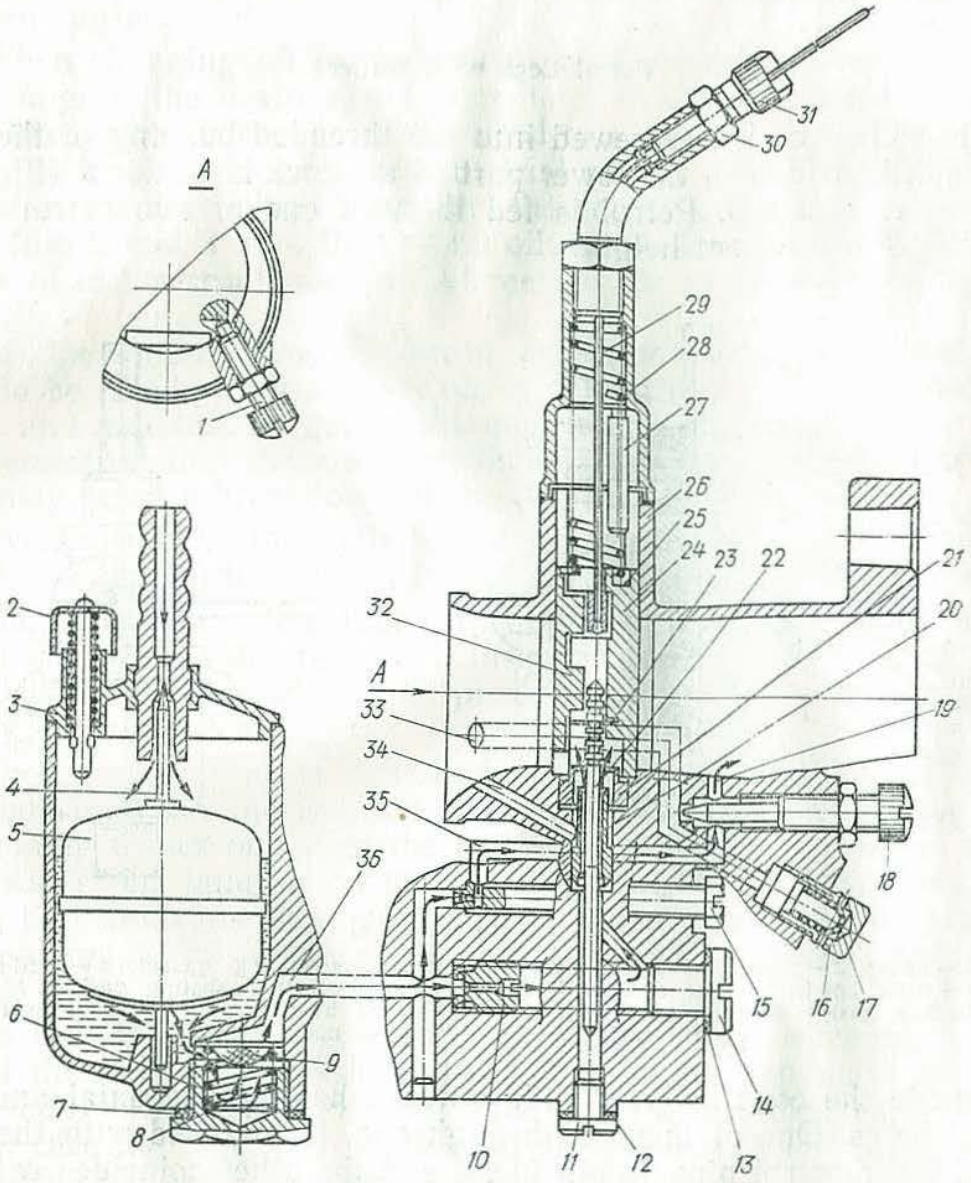

Fig. 13. Carburettor:

1 — throttle stop screw; *2* — depressor; *3* — float chamber cover; *4* — float needle; *5* — float; *6* — filter plug; *7* — gasket; *8* — filter spring; *9* — fuel filter; *10* — main jet; *11* — plug; *12* — gasket; *13*—gasket; *14* — plug; *15* — idling jet; *16* — air filter body; *17* — air filter gauze; *18*— air-fuel ratio adjusting screw (for adjustment at slow speed); *19* — atomizing hole of idling jet; *20* — atomizer; *21* — headpiece; *22* — adjusting needle; *23* — throttle needle retainer; *24*— throttle body; *25* — throttle expansion spring; *26* — carburettor body; *27* — throttle valve stop; *28* — carburettor cover; *29* — spring; *30* — detent check nut; *31* — union; *32* — throttle side piece; *33* — idling jet air passage; *34* — atomizer air passage; *35* — fuel-supply passage to atomizing hole; *36*— main fuel supply passage

Downloaded from www.Manualslib.com manuals search engine