To discharge the accumulated oil, baffled by the flywheel gland, the crankcase is provided with oil-drain passage *1*.

To prevent the oil leakage from the crankcase to the clutch, the flywheel hub is fitted with a rubber gland; the breaker is protected against oil contamination by means of a rubber gland on the camshaft.

The centrifuge is used as a secondary oil filter. Before reaching the centrifuge, the oil is cleaned by passing only through the gauze of the oil header. Aluminium body *8* (Fig. 11) and centrifuge cover

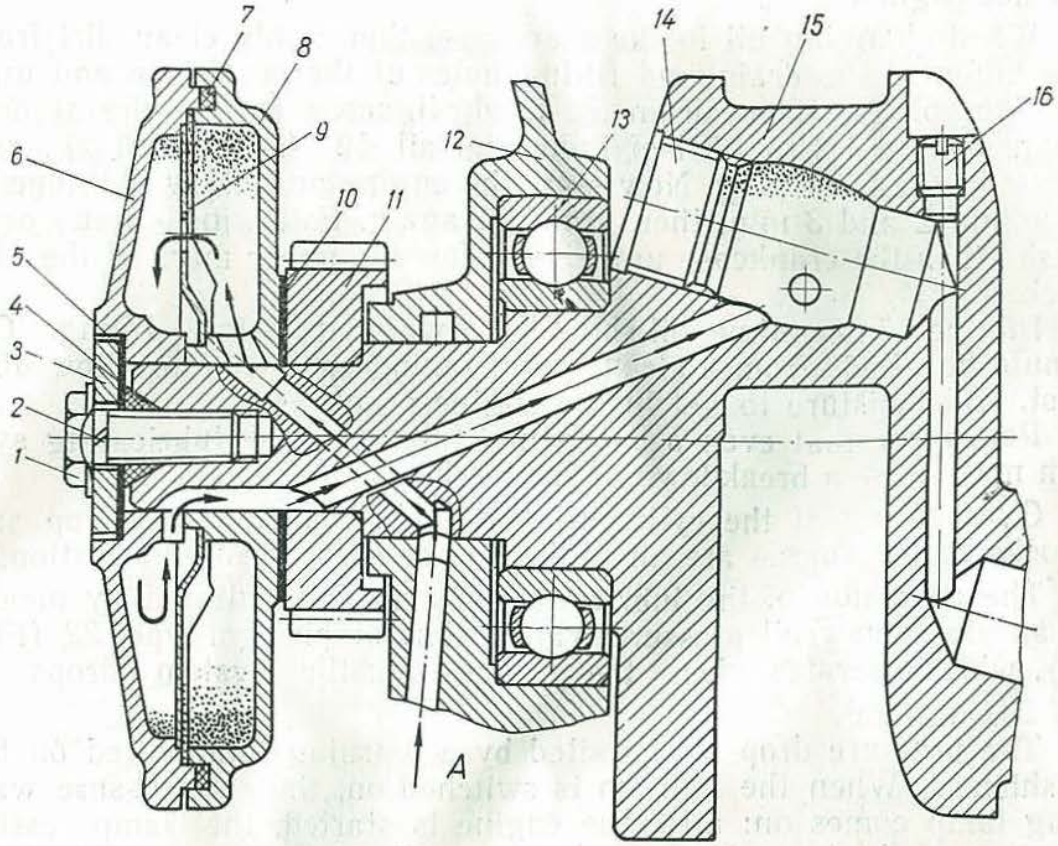

Fig. 11. Centrifuge and front crankshaft ball bearing:

1 — centrifuge fastening bolt; *2* — lock washer; *3* — centrifuge washer; *4* — sealing ring; *5* — gasket; *6* — centrifuge cover; *7* — sealing ring; *8* — centrifuge body; *9* — screen; *10* — timing pinion gasket; *11* — driving timing pinion; *12* — front bearing body; *13* — front crankshaft ball bearing; *14* — crankshaft plug; *15* — crankshaft; *16* — screw; *A* — from oil pump

6 which are mounted on the front pin of the crankshaft, are fixed by key and secured by bolt *1*, using special washer *3* fitted in the centrifuge cover. To keep bolt *1* from loosening, lock washer *2* is fitted. Provided between the centrifuge body and the cover is screen *9* with an elongated hole for the passage of oil from the body into the centrifuge cover and further on through the channels to the crankpin bearings. The correct position of the hole on the screen (with respect to the channels) is ensured by means of a tab which enters the centrifuge body. The centrifuge body and cover are sealed by special rubber ring *7*. To reduce the oil leakage between the washer and the crankshaft end, sealing ring *4* is provided.

Downloaded from www.Manualslib.com manuals search engine