with the idle gear fitted on the cover of the gear box. The idle gear is in constant mesh with the reverse gear of the primary shaft.

The reverse gear may be engaged only when the motorcycle is at rest and the gearshift mechanism is in the main neutral position (between first and second speed gears).

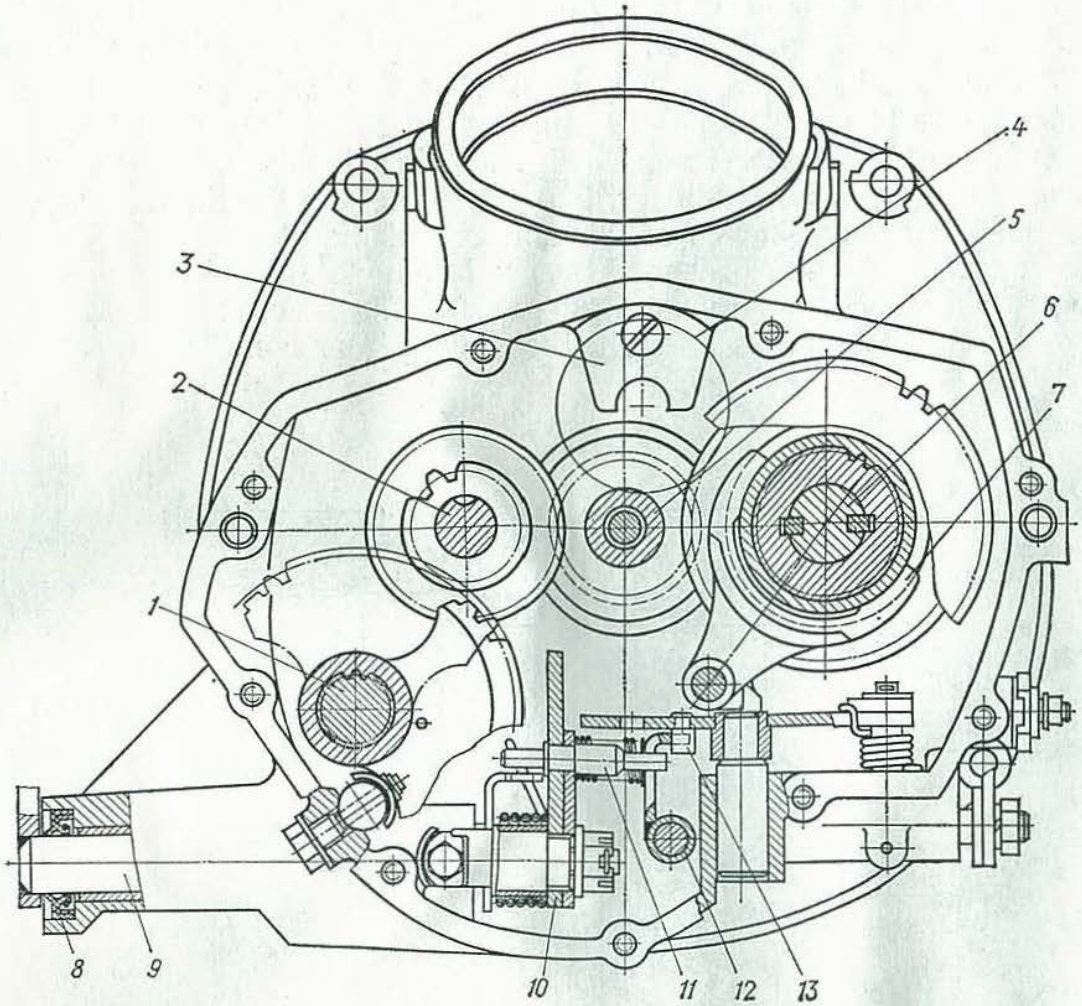

Fig. 16. Cross-sectional view of gear box:

1 — starting mechanism shaft; *2* — intermediate shaft; *3* — idle gear stop; *4* — installation place of idle gear; *5* — primary shaft; *6* — secondary shaft; *7* — gearshift fork; *8* — gland; *9* — shifter shaft; *10* — crank-cam; *11* — crankpin; *12* — gearshift mechanism pawl; *13* — gearshift disk pin

Putting the motorcycle in reverse, when any of the other gears is engaged, is excluded by a special lug on the reverse shift fork which enters the corresponding recess on the gearshift disk, when changing over to reverse.

The reverse shift lever is secured on the tapered part of the lever shaft and is set to the required position before tightening the nut.

Clutch Release Mechanism Actuated at Gearshifts

When gear shifting is effected, a rocking motion is imparted to the crank-cam, moving it forward or backward from its middle po-

Downloaded from www.Manualslib.com manuals search engine