sition and raising its long arm with the roller of double-arm lever located inside the casing of the gear box.

The short arm of this lever acts on the intermediate compound rod whose outer end presses on the adjusting bolt of the outer clutch release lever.

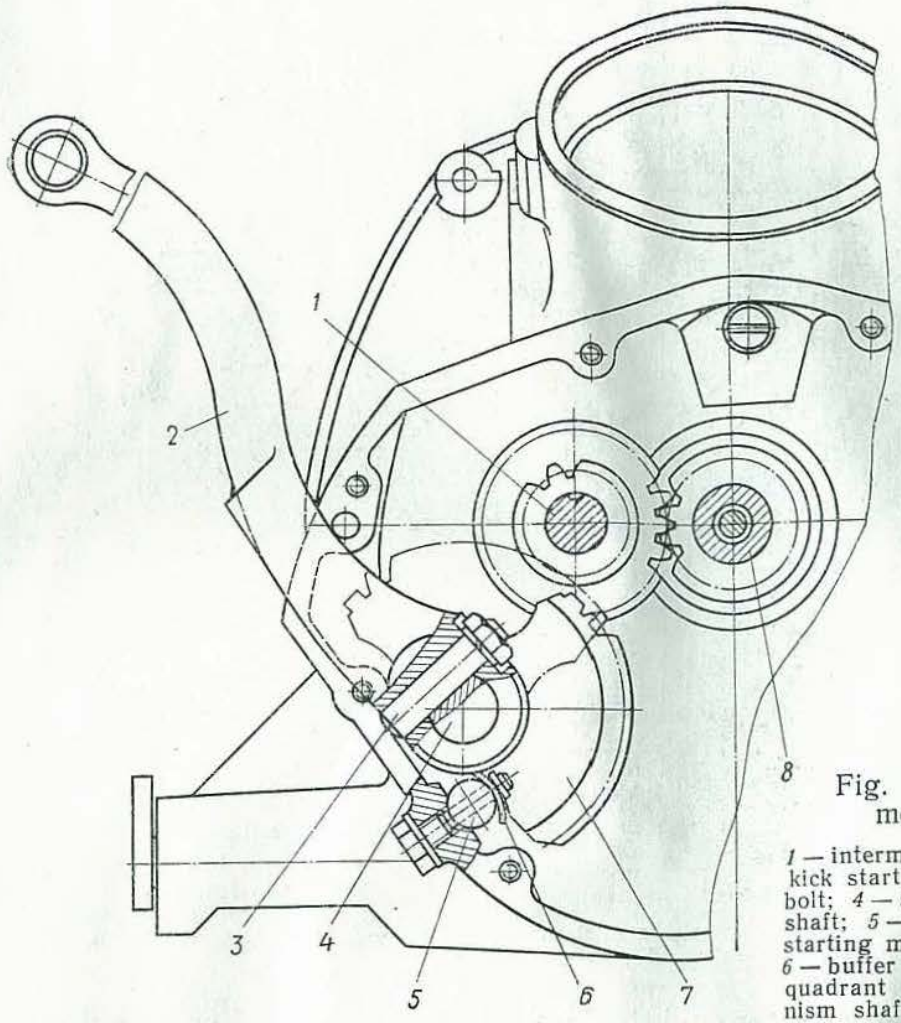

Fig. 17. Starting mechanism:

1 — intermediate shaft; *2* — kick starter lever; *3* — wedge bolt; *4* — starting mechanism shaft; *5* — rubber buffer of starting mechanism quadrant; *6* — buffer facing; *7* — toothed quadrant of starting mechanism shaft; *8* — primary shaft

The outer lever, rocking on its pin, actuates the clutch release rod through the slide block, bearing, and end piece.

Servicing the Gear Box

Servicing of the gear box consists in timely replenishment of oil in the casing and adjustment of the clutch release mechanism, whenever required.

1. Oil must be changed at intervals specified by the present instructions. The oil level in the casing should be checked with a dipstick, as described in the Section "Preparing for a Ride". The dipstick is provided with a red-painted polyethylene head which is used as a breather. The head may be removed in case the breather has to be cleaned.

Downloaded from www.Manualslib.com manuals search engine