Crankshaft

The double-bearing crankshaft is a casting made of high-strength cast iron and has two cranks arranged in the same plane at an angle of 180°. It consists of two (front and rear) journals, a web and two crankpins.

The crankshaft is installed in the engine crankcase in two bearings *30* and *39* (Fig. 6). Fitted on the front end of the crankshaft are driving pinion *4* of the timing gear and a centrifuge, the tapered and of the rear journal is provided with flywheel *22*.

If operated under normal conditions, the crankshaft together with the crankpin sliding bearings will have a long service life. But in

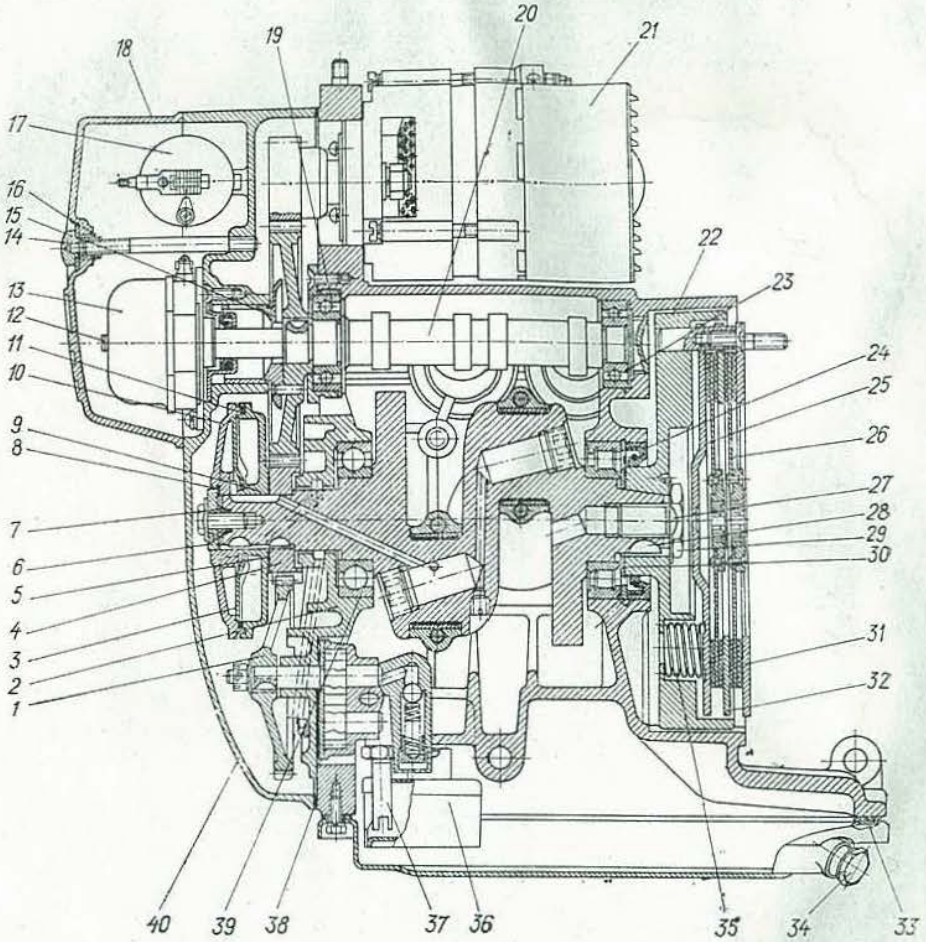

Fig. 6. Engine (longitudinal section):

1 — oil pump drive gear; *2* — front bearing body with oil pump; *3* — centrifuge screen; *4* — driving timing pinion; *5* — gasket of driving timing pinion; *6* — centrifuge washer; *7* — sealing ring; *8* — gasket of centrifuge washer; *9* — centrifuge body; *10* — centrifuge cover; *11* — centrifuge sealing ring; *12* — contact breaker holder with cleat; *13* — motorcycle contact breaker ПМ302-01; *14* — cover fastening nut; *15* — breather; *16* — locking ring for covers; *17* — ignition coil Б204; *18* — crankcase front cover; *19* — camshaft front bearing; *20* — camshaft with gear; *21* — generator with gear; *22* — flywheel with clutch pins; *23* — camshaft rear bearing; *24* — crankshaft gland; *25* — clutch driving pressure disk; *26* — clutch driven disk; *27* — flywheel lock washer; *28* — flywheel Woodruff key; *29* — flywheel fastening bolt; *30* — crankshaft rear bearing; *31* —clutch driving bearing disk; *32* — clutch driving intermediate disk; *33* — sump gasket; *34* — drain plug; *35* — clutch pressure spring; *36* — oil header; *37* — oil intake pipe; *38* — distributor box gasket; *39* — crankshaft front bearing; *40* — distributor box cover

Downloaded from www.Manualslib.com manuals search engine