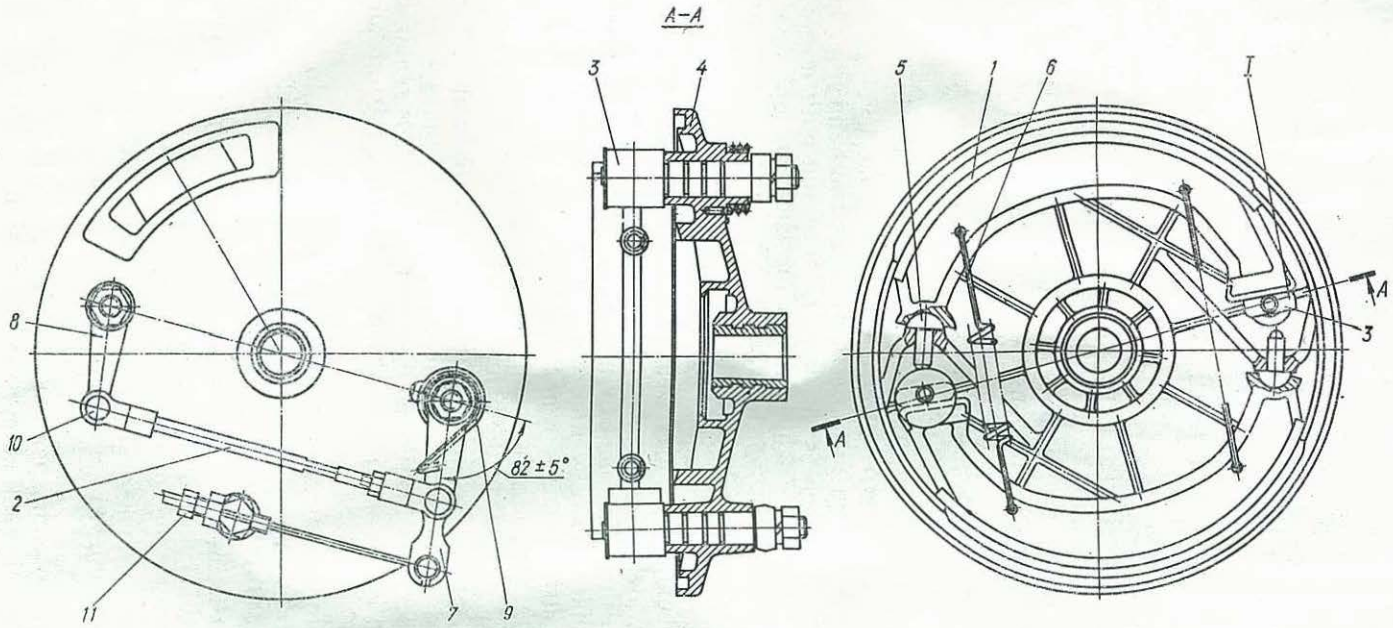

Fig. 27. Front brake:

1 — brake shoe; *2* — rod with forks; *3* — cam; *4* — disk; *5* — tappet; *6* — spring; *7* — driving lever; *8* — driven lever; *9* — return spring; *10* — pin; *11* — adjusting union; *I* — washer not shown conventionally; *A—A*—revolved

Downloaded from www.Manualslib.com manuals search engine