Contact Breaker With Ignition Advance Automatic Device

The ПМ302-01 contact breaker (Fig. 35) consists of body *13*, contacts *3* and *4*, cam *5* with a centrifugal regulator, capacitor *15*, and cover.

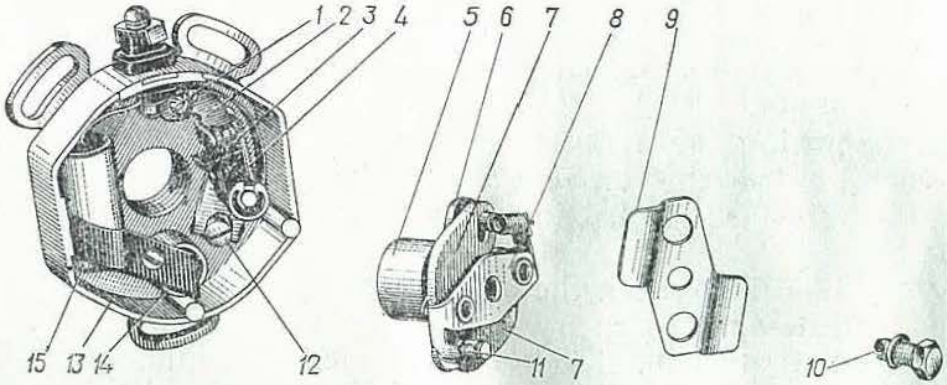

Fig. 35. Contact breaker with ignition advance automatic device ПМ302-01:

1 — lock screw of contact leg; *2* — contact leg; *3* — fixed contact; *4* — breaker lever with contact; *5* — contact breaker cam; *6* — plate with axles; *7* — weights; *8* — fixed plate; *9* — spring guard; *10* — automatic device securing bolt; *11* — automatic device spring; *12* — adjusting screw; *13* — contact breaker body; *14* — felt-fitted post; *15* — capacitor

The body is secured by screws to the cover of the crankcase distributing box using three ears with cam slots, two screws, and breaker cover holder. On releasing the screws and the holder, turn the body until the required ignition time is established.

At the centre of the body is a through hole into which enters the end of the cam shaft having a cylindric neck with two flats at the end, and a threaded hole.

The clearance between the contacts is adjusted to 0.4—0.6 mm by screw *12* after first releasing lock screw *1*. The adjusting screw has an eccentric head which enters the slot of the contact leg. When the screw is turned in one direction or the other, the contact leg approaches the breaker lever or moves away from it.

The centrifugal regulator (ignition advance automatic device) consists of fixed plate *8*, on which are secured two pins used as axles for weights *7*.

Prior to installing the ignition advance automatic device on the camshaft, slightly lubricate the protruding end of the shaft and the cam hole with grease ЦИАТИМ-201.

When the camshaft is rotated, the weights tend to part, turning on their axles. The angle of rotation of the weights is adjusted by calibrated springs *11*, one end of which is fastened to the fixed plate, the other, to the pins of cam plate. As the weights move apart due to engine speed being gradually increased, the cam turns with respect to the shaft thus automatically setting an earlier ignition advance angle. The cam is secured against axial displacement by the fixed plate.

Downloaded from www.Manualslib.com manuals search engine