Rear Wheel Brake

Fig. 28 illustrates the design of the rear wheel brake.

Brake shoes *8* bear with the spherical nests against the heads of tappets *2* and with the pressure areas, on cam *5*. The cam has a slot accomodating equalizer *6*. When the cam with the equalizer are turned the shoes are not pressed to the brake drum.

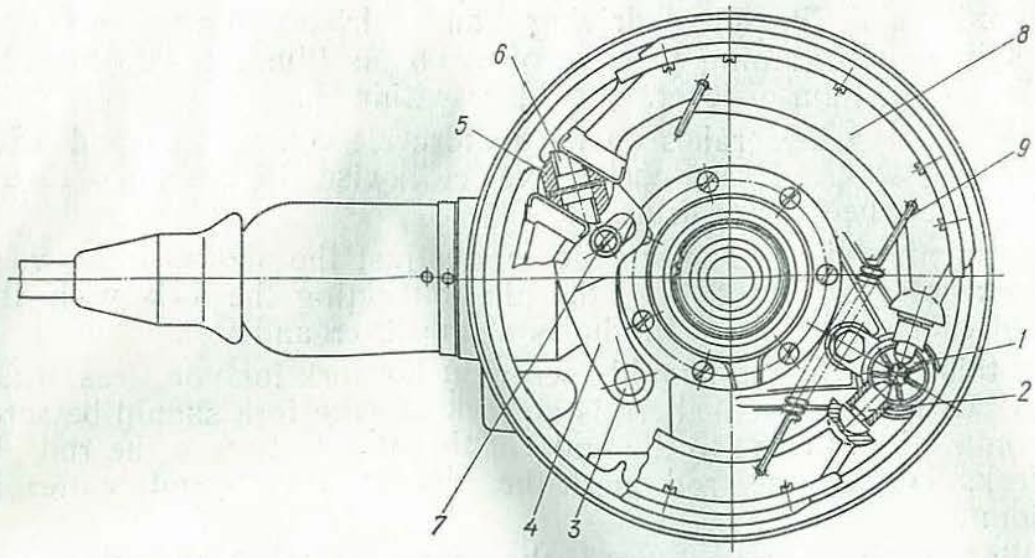

Fig. 28. Rear wheel brake:

1 — adjusting taper; *2* — tappet; *3* — lever axle; *4* — lever; *5* —cam; *6* — equalizer; *7* —lever screw; *8* — brake shoe; *9* — brake shoe spring

As the friction linings wear out the gap between the brake shoes and the wheel drum increases. To maintain this gap within the required limits the brake is provided with a wear compensator which is made as taper *1*. The taper is screwed in, as need arises, from the external side and moves apart tappets *2* which bring the brake shoes closer to the drum and cam with equalizer. Longitudinal grooves on the taper surface are provided for fixing the taper position. The tappets acted upon by springs *9* which tighten the brake shoes enter these grooves.

The necessity in brake adjustment is judged by the free travel of rear wheel brake lever end. The free travel is considered normal if it does not exeed 35 mm. If it exceeds 35 mm, than using a wrench with 8 mm span turn the protruding square of the adjusting taper clockwie (as it is shown in Fig. 30) through one or several fixed intervals which are perseptible by the effort required for its turning. In this case the length of the rear draw rod should be adjusted so as described below.

The rear wheel brake draw rod length is adjusted during its installing on a motorcycle as well as during repair operations. The front draw rod is not to be adjusted.

The adjustment is made with the wheel removed and the rear brake pedal pressed from below to the footstep in the following order:

Downloaded from www.Manualslib.com manuals search engine