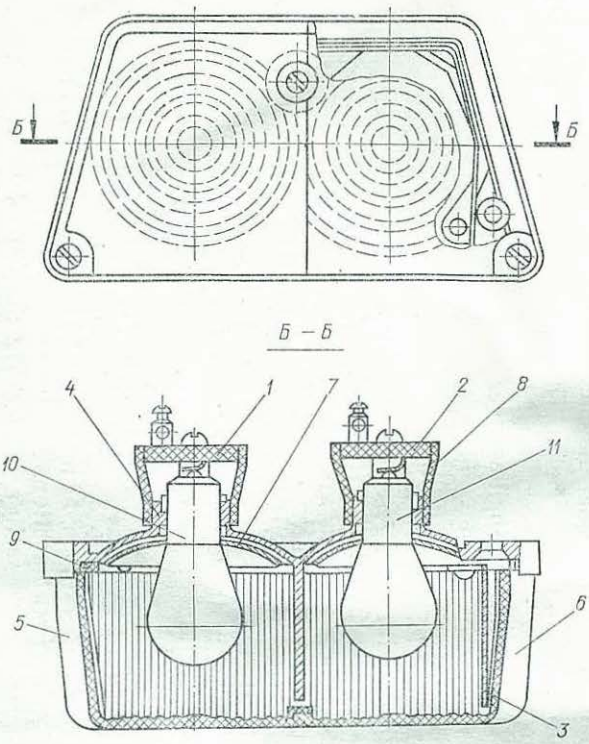

Fig. 38. Sidecar front lamp ФП232Б:

1 — panel with contact; *2* — panel with contact; *3* — board; *4* — base; *5*— orange diffuser; *6* — colourless diffuser; *7* — reflector; *8* — protective hood; *9* — gasket; *10* — bulb A12-21; *11* — bulb A12-8

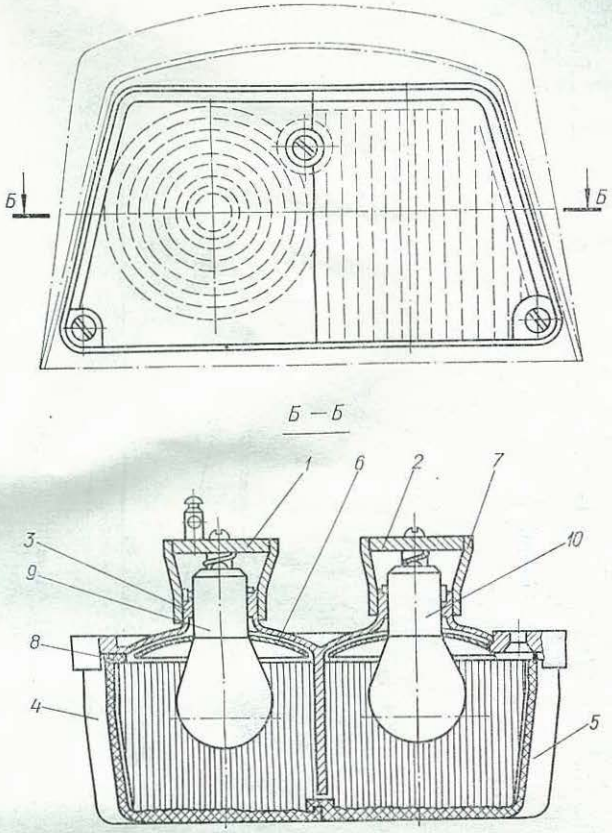

Fig. 39. Sidecar rear lamp ФП219Б:

1 — panel with contact; *2* — panel with contact; *3* — base; *4* — orange diffuser; *5* — rod diffuser; *6* — reflector; *7* — protective hood; *8* —gasket; *9* — bulb A12-21; *10* — bulb A12-21+6

Downloaded from www.Manualslib.com manuals search engine